TL
LHR-RM

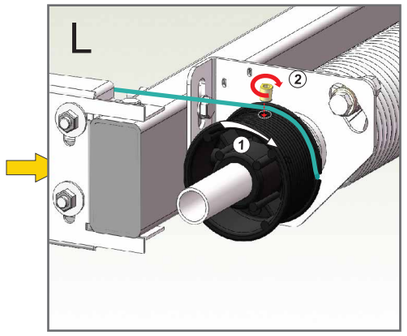
L
2
1

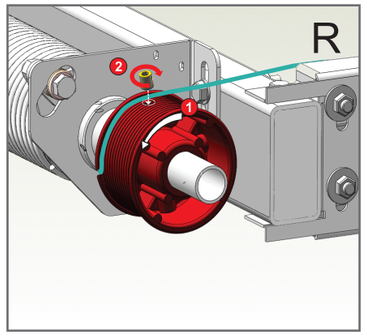
R
2
1

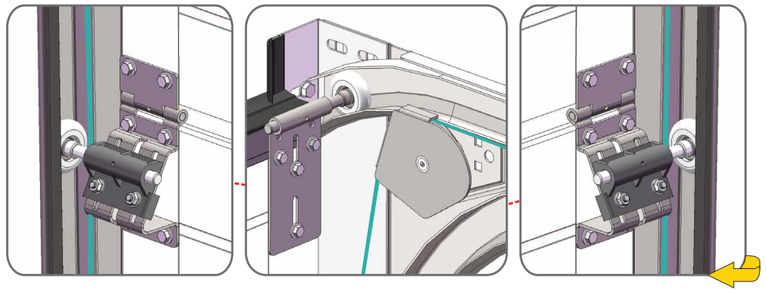

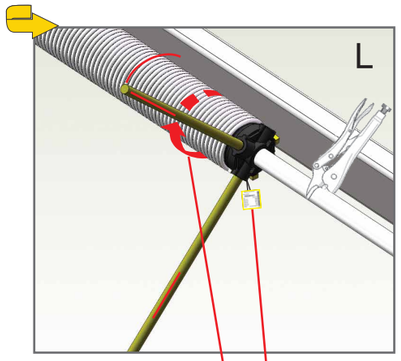
L

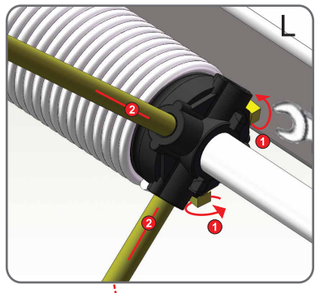
L
2
1
2
1

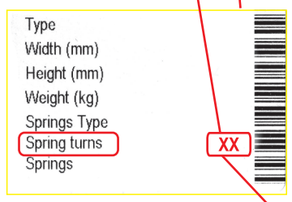
Type
Width (mm)
Height (mm)
Weight (kg)
Springs Type
Spring turns
Springs
XX

OIL

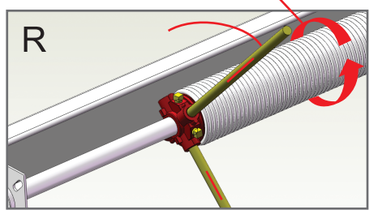
R

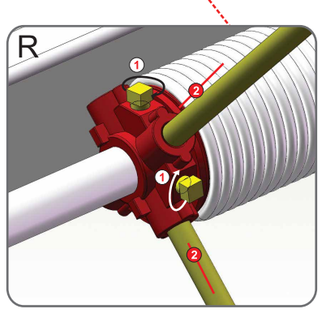
R
1
2
1
2

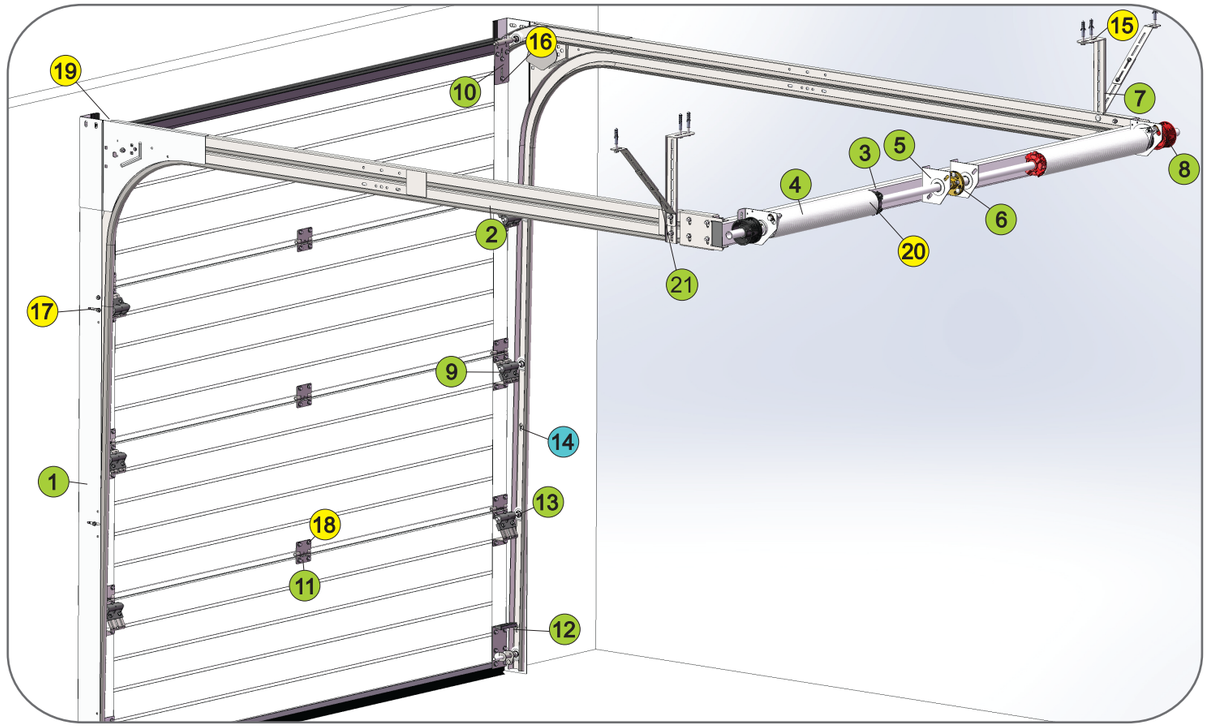
19
16
15
10
7
3
5
8
4
6
2
20
21
17
9
14
1
13
18
11
12

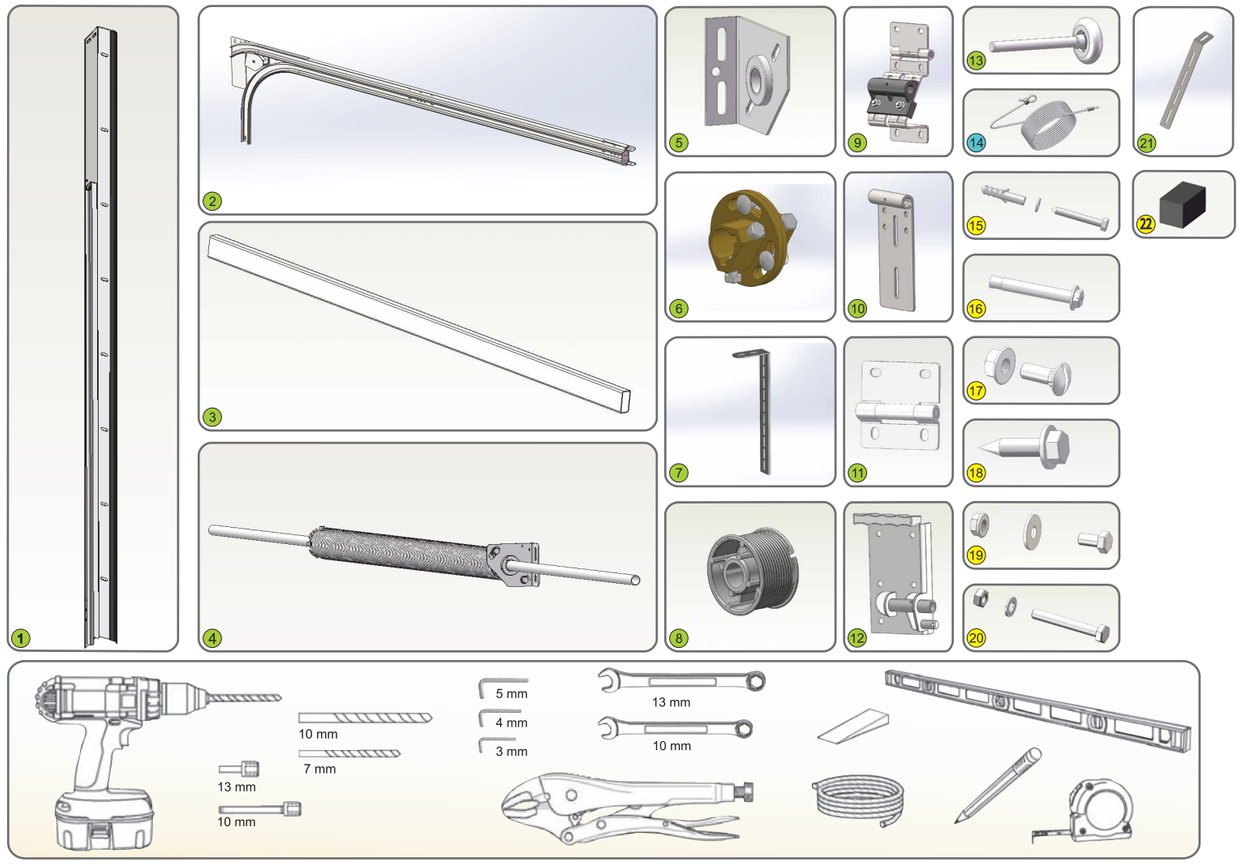
1
2
3
4
5
9
13
14
21
6
10
15
22
16
7
11
17
18
8
12
19
20
10 mm
7 mm
13 mm
10 mm
5 mm
4 mm
3 mm
13 mm
10 mm

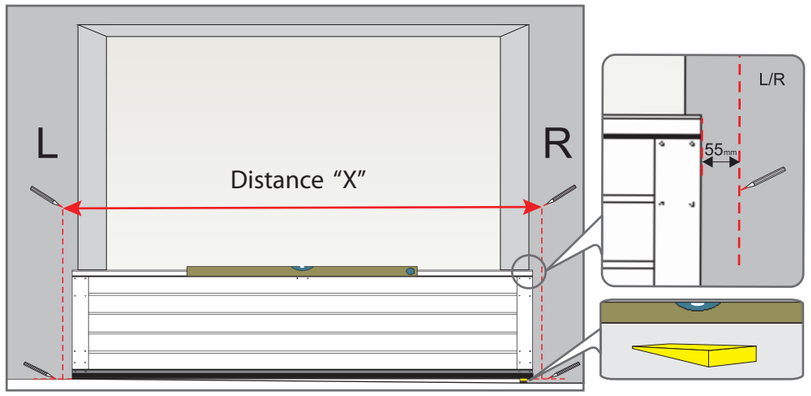
L
R
Distance "X"
L/R
55mm

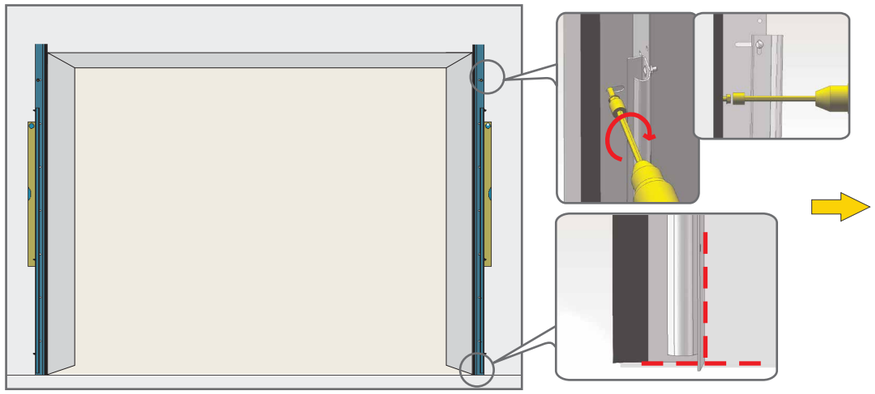

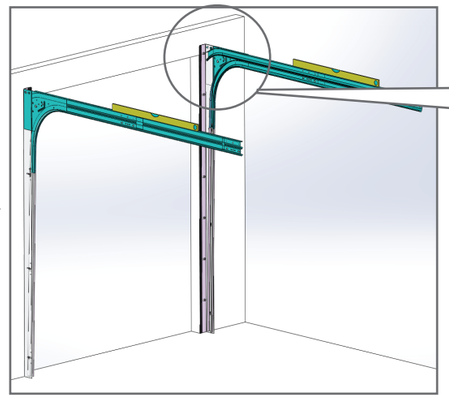

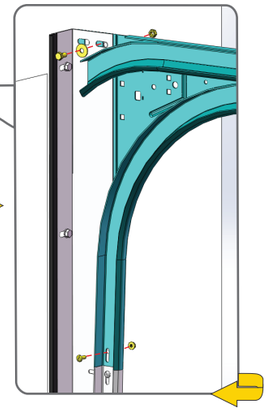

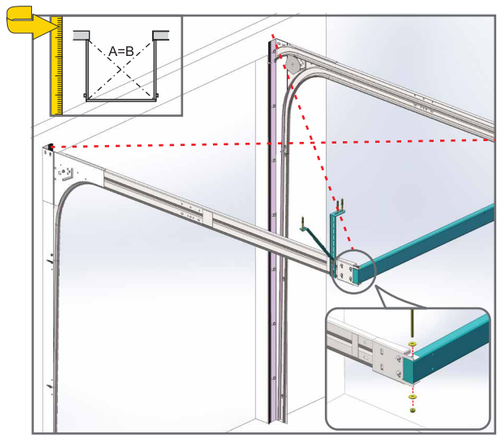
A=B

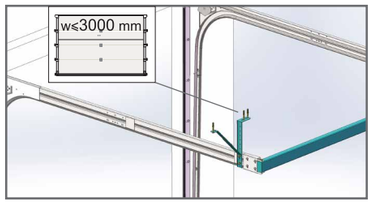
w≤3000 mm

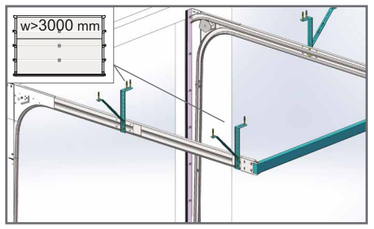
w>3000 mm

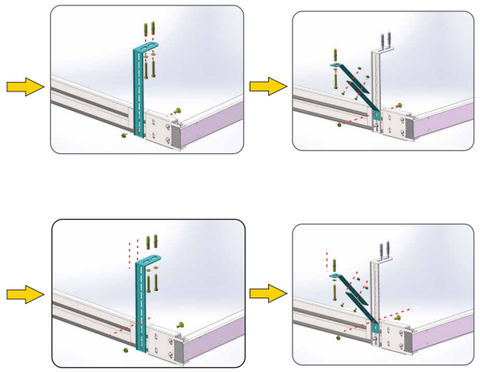

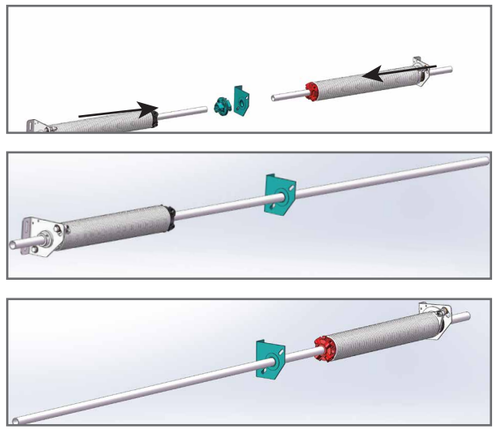

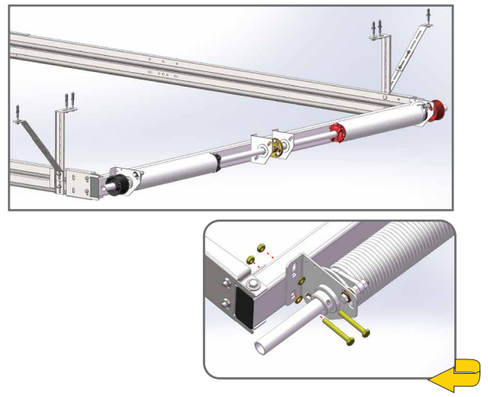

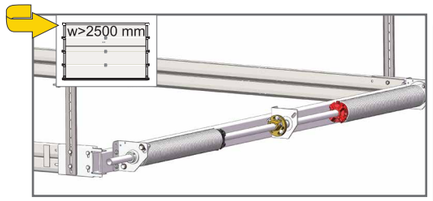
w>2500 mm

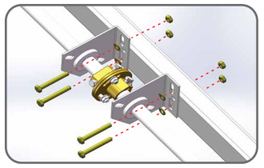

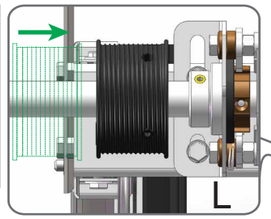
L

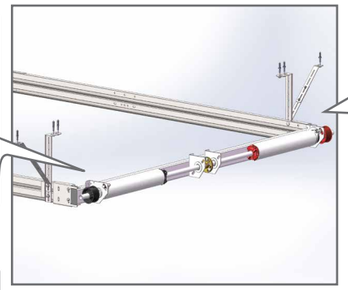

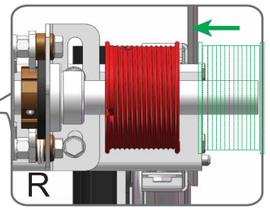
R

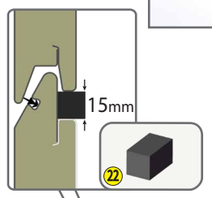
15mm
22

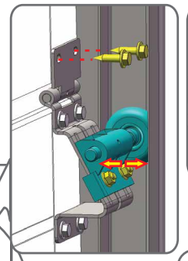

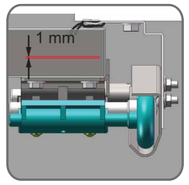
1 mm

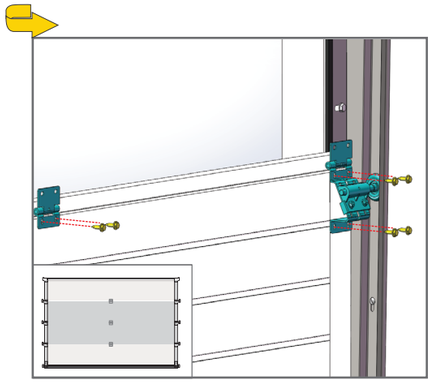

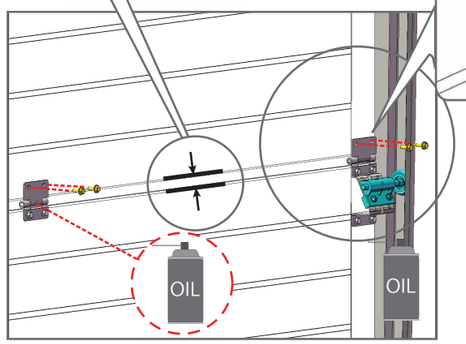
OIL
OIL

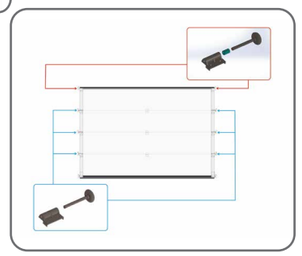

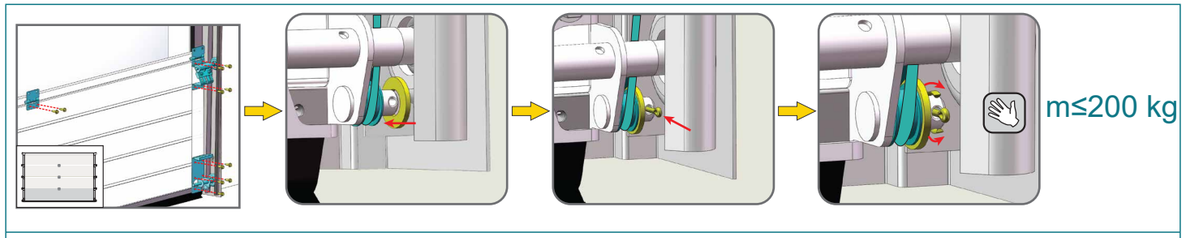
m≤200 kg

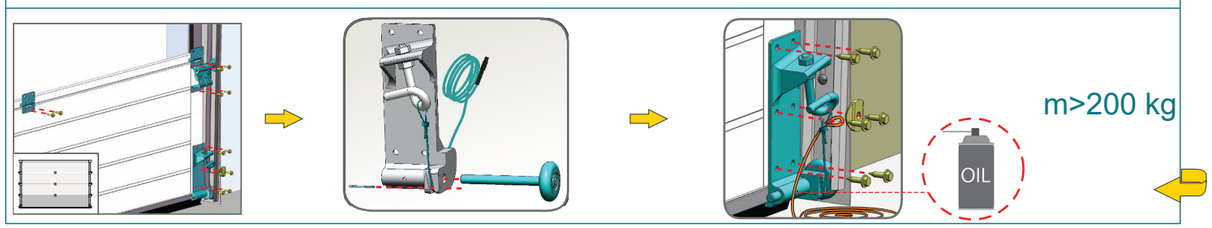
m>200 kg
OIL

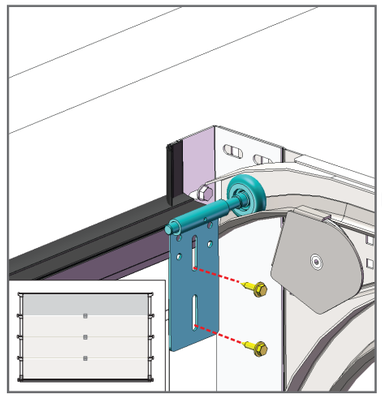

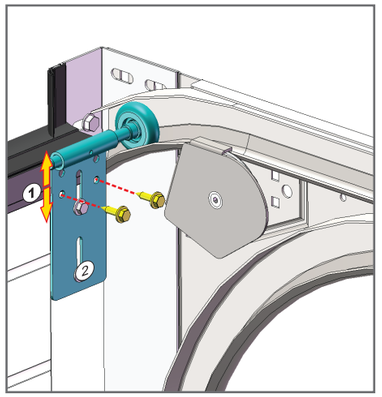
1
2

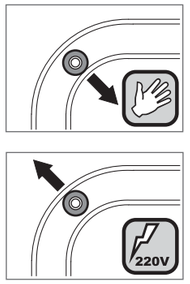
220V