TL
LHR-FM

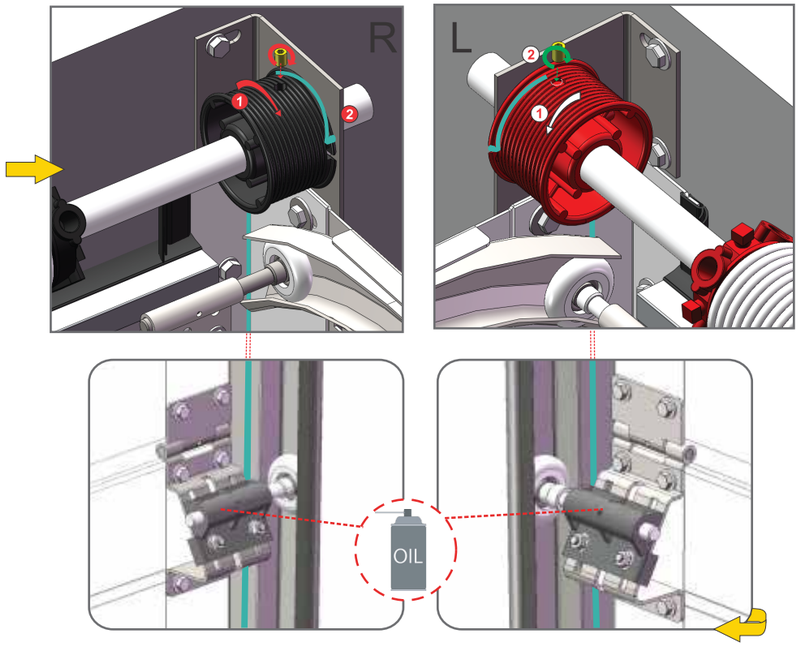
R
L
OIL

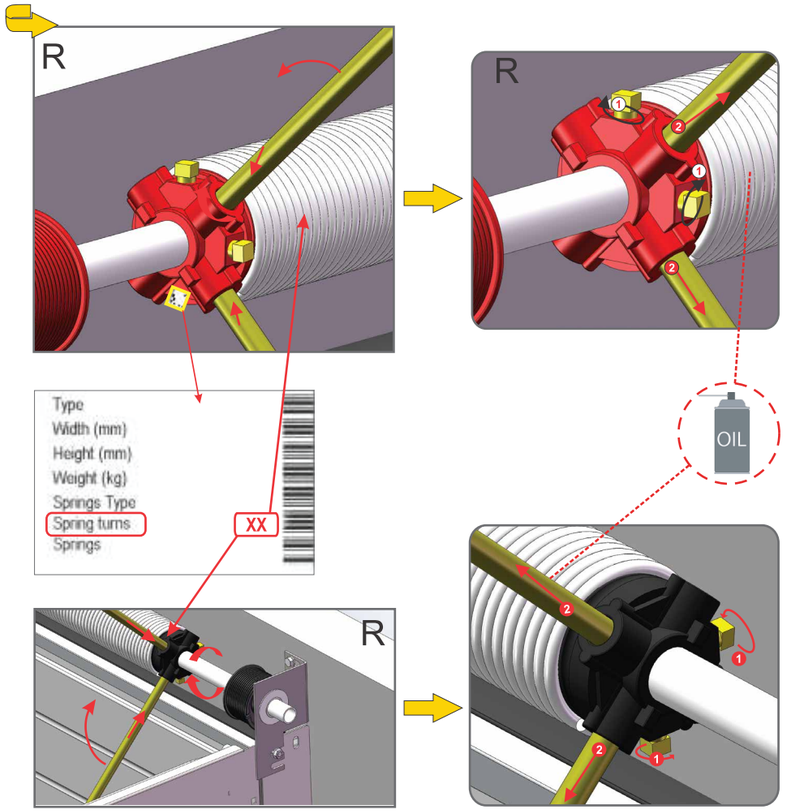
R
R
Type
Width (mm)
Height (mm)
Weight (kg)
Springs Type
Spring turns
Springs
XX
OIL
R

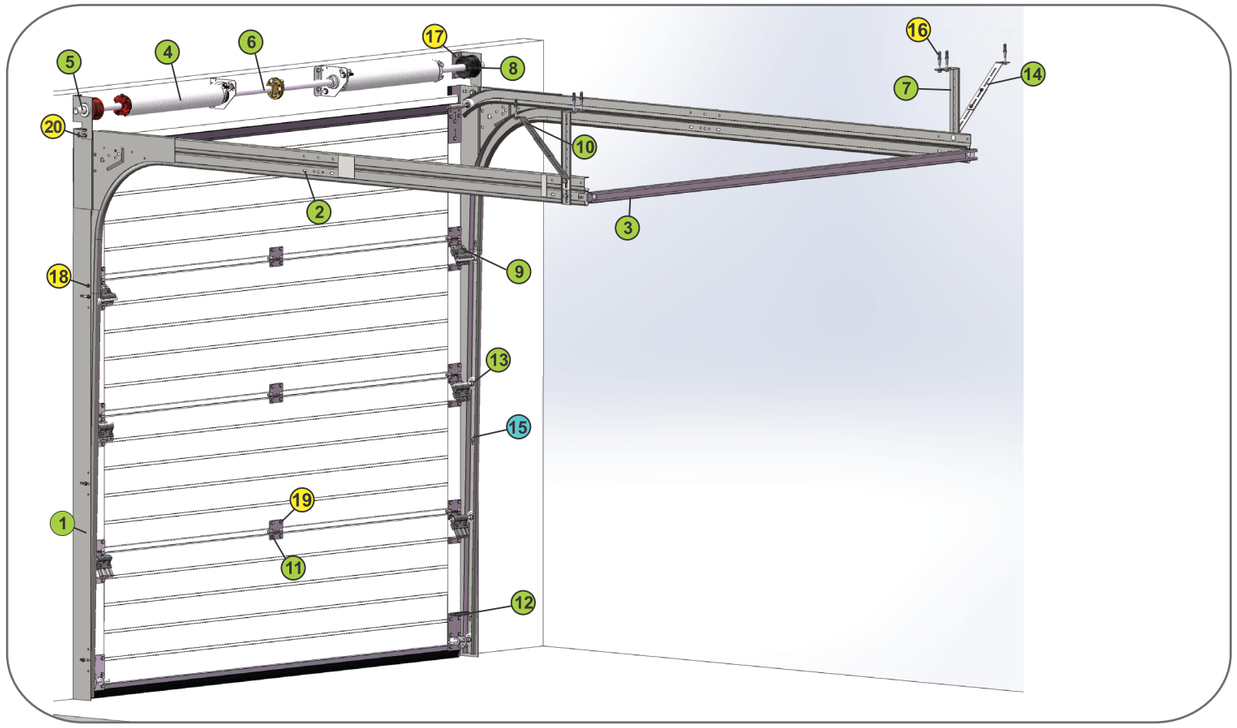
1
2
3
4
5
6
7
8
9
10
11
12
13
14
15
16
17
18
19
20

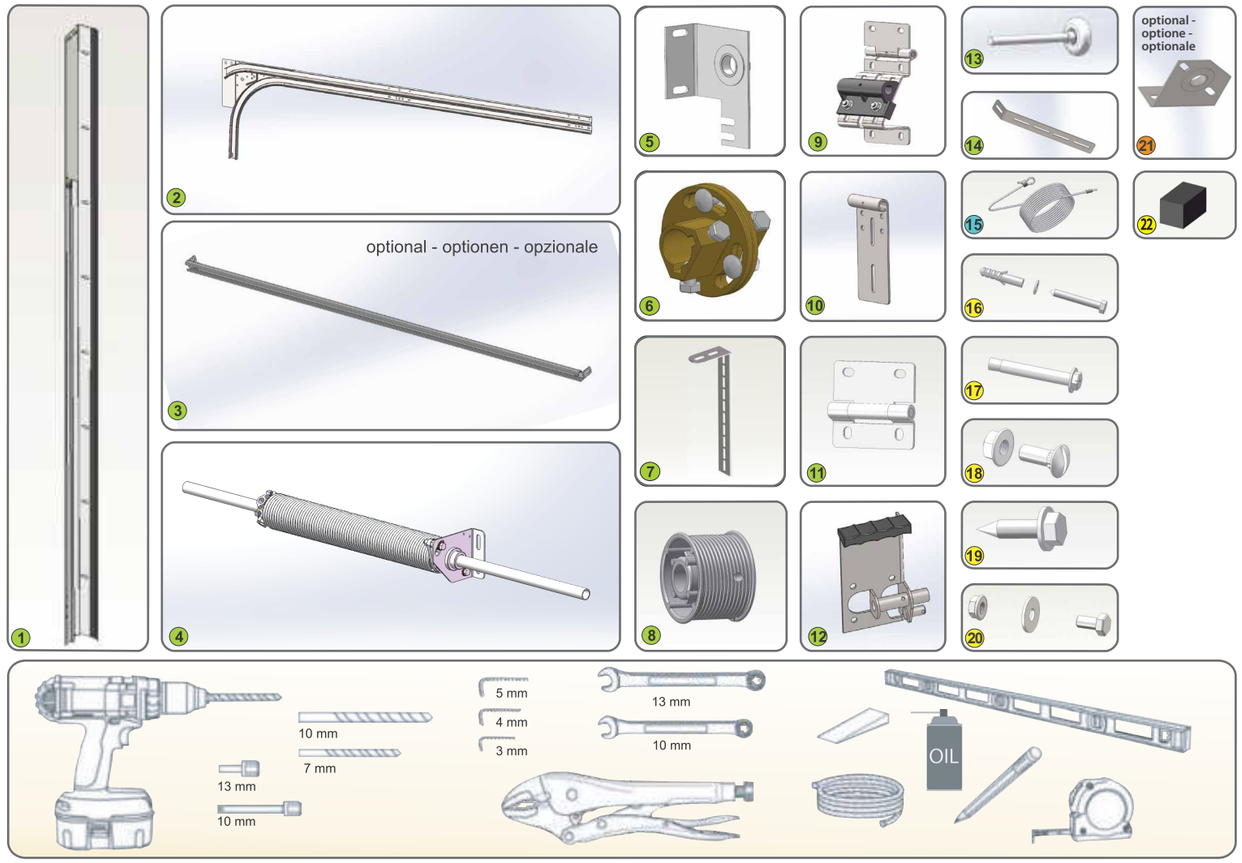
optional - optionen - opzionale
optional - optione - optionale
OIL
10 mm
7 mm
13 mm
10 mm
5 mm
4 mm
3 mm
13 mm
10 mm

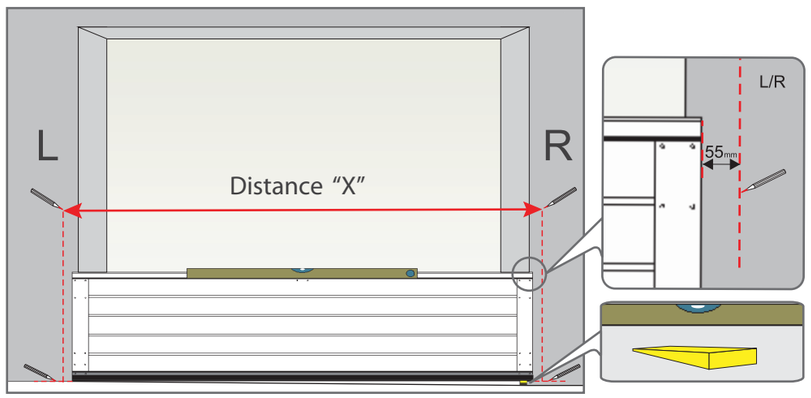

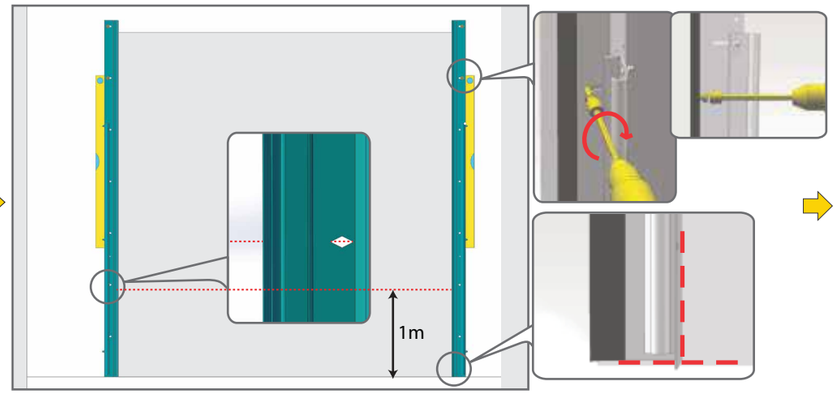

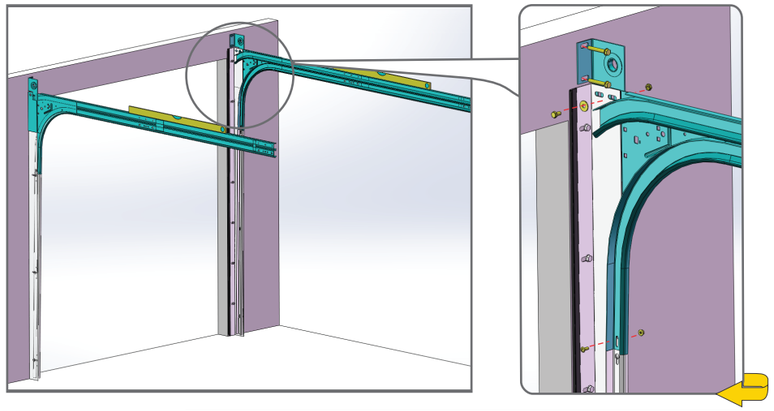

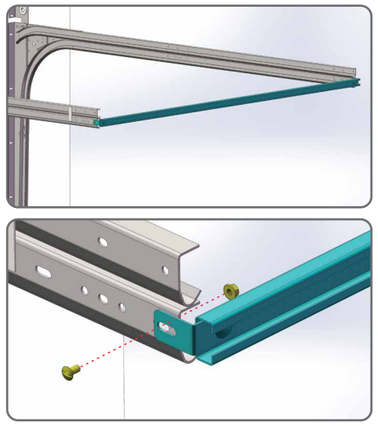

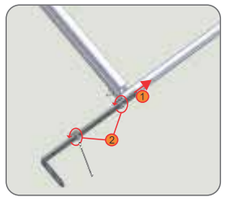

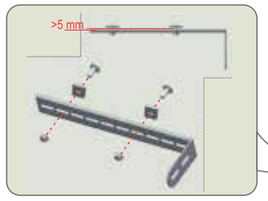

"L" wall bracket

w < 3000 mm

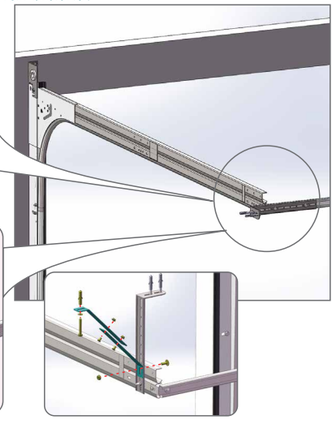

"L" ceiling bracket

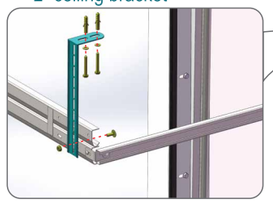
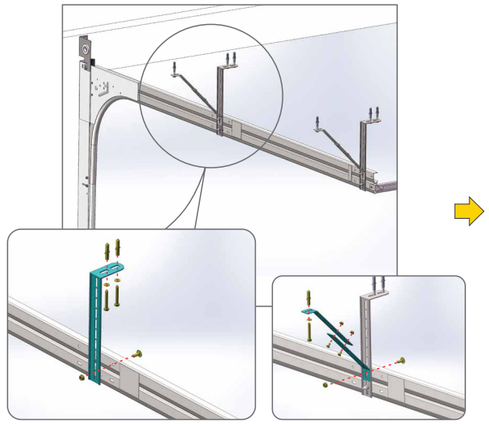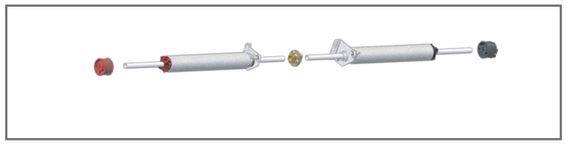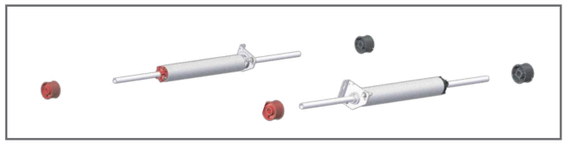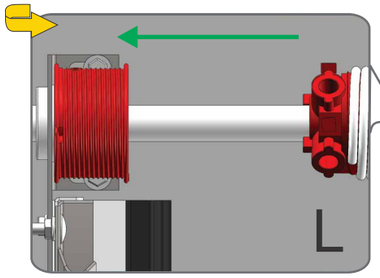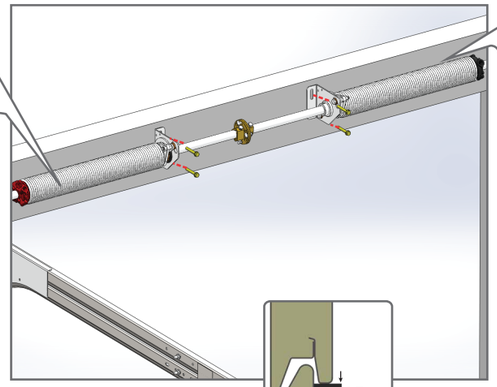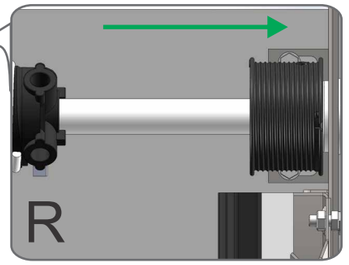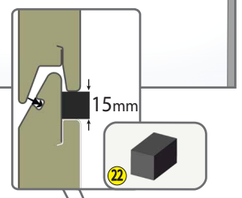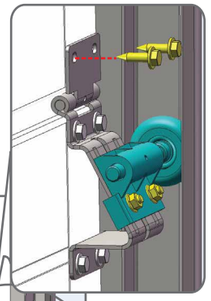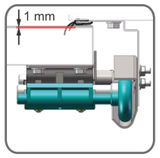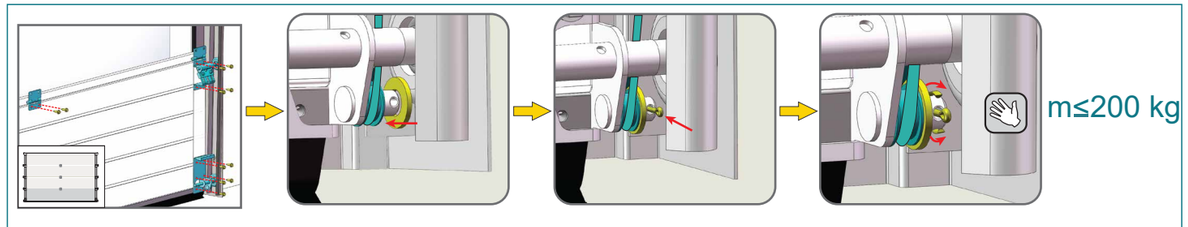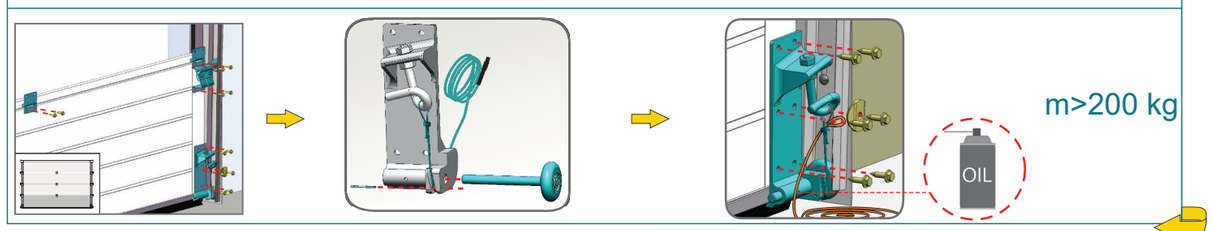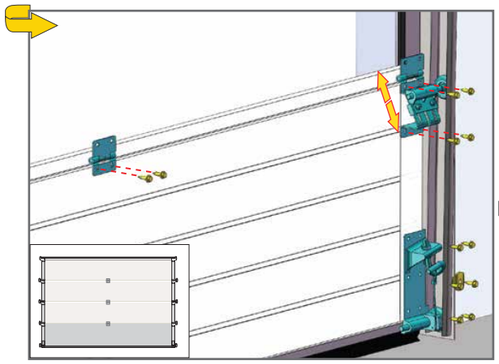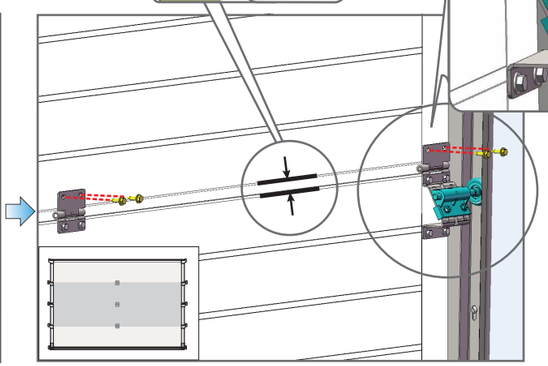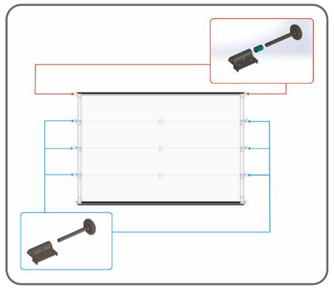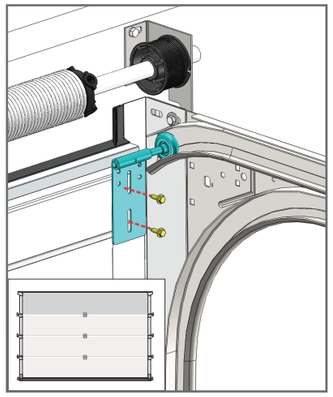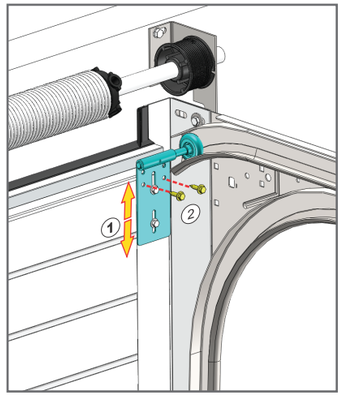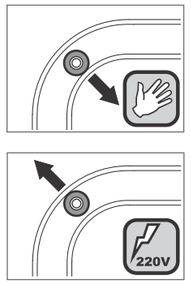
w > 3000 mm